KUM-100 Four-wire Dual Output Ultrasonic Level Meter

Table of contents

1.Introduction 1
2.Product Features 1
3. Technical Specifications 1
4.Working Principle & Wiring 2
5.Product Dimension 2
6. Menu List 3
7. Installation Method & Precautions 4
7.1 Installation for Level Meter 4
7.2Working mode 5
7.3 Power supply 6
8. Relay Settings 6
9. ModBus Settings 6
9.1 RTU communication method 6
9.2 Function code 03H, read registers 6
9.3 RTU communication method 7
9.4 Example Explanation 7

1.Introduction

Ultrasonic level meter is an intelligent non-contact liquid level measurement instrument. It does not have to contact the industrial medium to meet most of the liquid level, material level measurement requirements, a complete solution to the pressure, capacitance, float type and other traditional measurement methods brought about by the winding, clogging, leakage, corrosion of the medium, maintenance and other shortcomings. Therefore, it can be widely used in various fields related to material level, liquid level measurement and control.

This product adopts advanced industrial-grade chip, digital temperature compensation, etc... The product adopts advanced industrial-grade chips, digital temperature compensation and other special integrated circuits, strong anti-interference, and has perfect level measurement and control, data transmission and man-machine communication functions. It also adopts ABS engineering plastic waterproof shell, comes with LCD liquid crystal display, high-definition Chinese and English menu interface. It supports isolated 4-20mA output, RS485 communication, two relays, and online output adjustment.

2.Product Features

- LCD display
- Solid level/liquid level mode selection
- Can arbitrarily set the starting point and end point of the output range
- With 4G/LoRa wireless communication (optional)
- With restore setting function, support to restore factory settings
- With digital filtering, dynamic echo recognition

3.Technical Specifications

Range	0-10m
Accuracy	±0.5%F.S
Display	LCD
Power supply	DC12-28V
Electrical interface	M16*1.5
Protection	IP65
Blind zone	0.4m
Resolution	1mm
Keys	Three patch buttons
Power consumption	<0.6W
Thread	G2
Working environment	temperature & pressure
Output	4 -wire 4 - 20mA, RS485, 2 relay (Default)

TEL: +86-17719566736 WEBSITE: www.kcsensor.com EMAIL: support@kacise.com
ADD: 2nd Building, Tianyuan International Mansion, High-tech Zone, Xi'an City, Shaanxi Province, China

4.Working Principle & Wiring

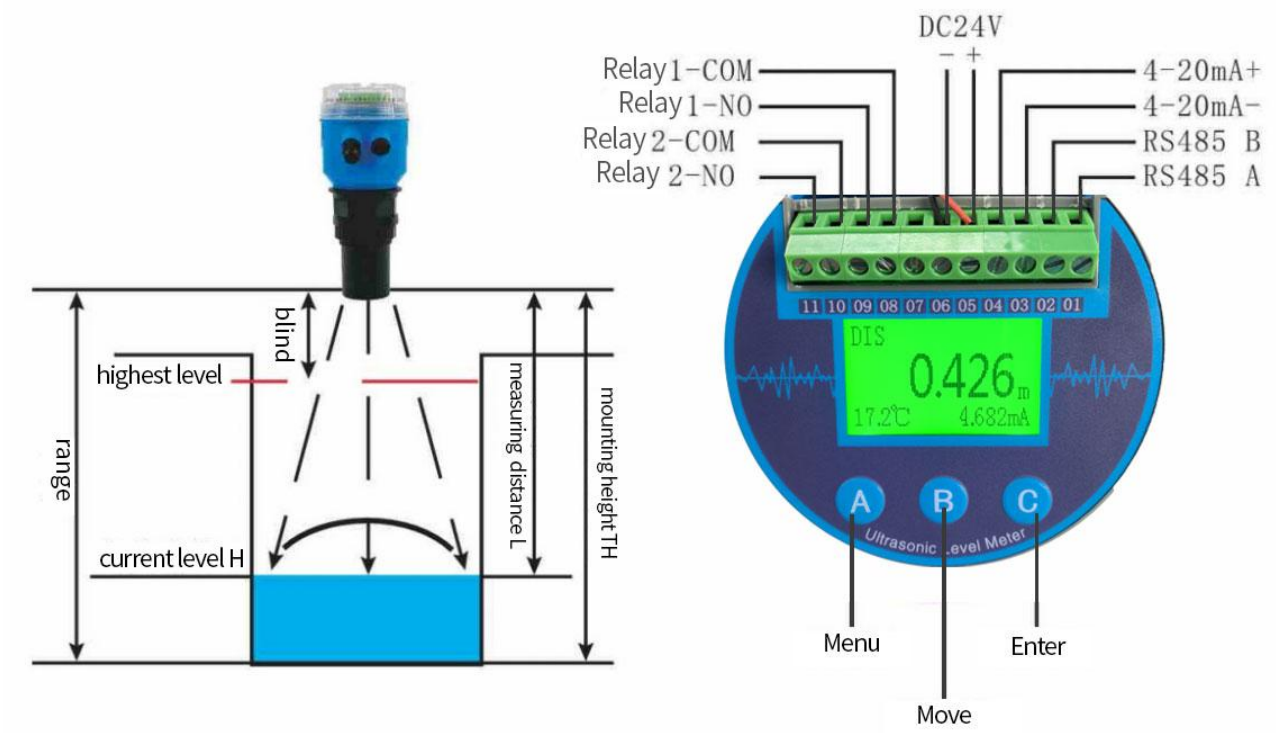

5. Product Dimension

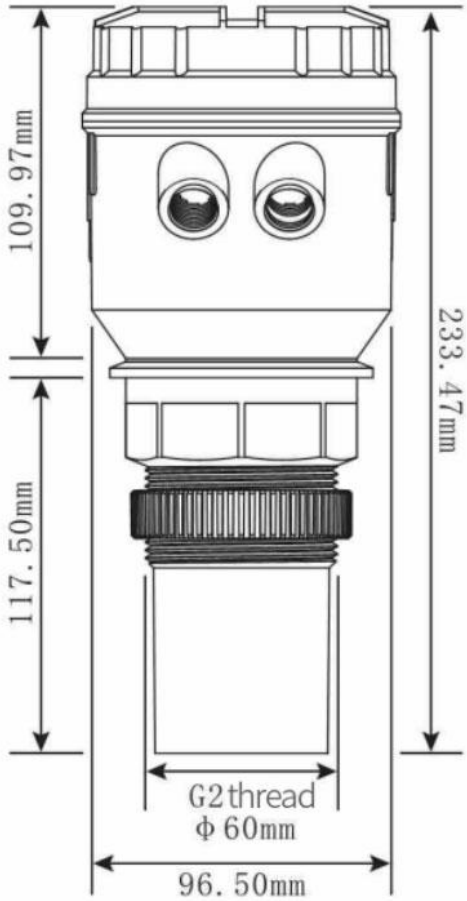

TEL: +86-17719566736 WEBSITE: www.kcsensor.com EMAIL: support@kacise.com
ADD: 2nd Building, Tianyuan International Mansion, High-tech Zone, Xi'an City, Shaanxi Province, China

6.Menu List

The factory default password is 00000, if there is any change, remember it lightly.

MOUNTING	Mount Height	Distance from the bottom plane of the probe to the bottom of the water, unit: m	
	Level Value	After the probe is fixed, enter the actual liquid level height, unit: m	
	Environment	OPEN/CLOSE【Default OPEN】	
OUTPUT	MODBUS SET	MODBUS ADDRESS	【Default 1】
		Baud Rate	【Default 9600】
		Check	【Default N，8，1】
	RELAY SET	CH1 ON	
		CH1 OFF	
		CH2 ON	
		CH2 OFF	
	CURRENT TEST	4-20mA TEST	
	CURRENT RANGE	OUT LOW	Value for 4mA【Default 00.000】
		OUT HIGH	Value for 20mA【Default 10.000】
DISPLAY	Unit	null/m/cm/mm/yard/feet/inch【Default m】	
	Point	0/0.0/0.00/0.000/0.0000【Default 0.000】	
	Convert	Coefficients for enlarged display【Default 1】	
	Contrast	Contrast ratio of the display screen【Default 40】	
	DisplayDelay	Backlighting time, unit:s【Default 0】	
PROBE	Filtering	NONE/Rapidly/Fast/Normal/Stable Steam/Foam/Stir【Default Normal】	
SYSTEM	User set	Modify the Menu Password【Default 00000】	
	Language	Chinese/English	

TEL: +86-17719566736 WEBSITE: www.kcsensor.com EMAIL: support@kacise.com
ADD: 2nd Building, Tianyuan International Mansion, High-tech Zone, Xi'an City, Shaanxi Province, China

7.Installation Method & Precautions

7.1 Installation for Level Meter

7.1.1 The probe generates both an ultrasonic pulse wave and a detection echo, which propagates from the surface of the probe in a certain conical wavefront. In this area, there should be no obstruction and away from the inlet. The installation position of the probe should be chosen in a position where there is no obstacle between the emitting surface of the probe and the medium to be measured. See Figure 1.

7.1.2 The shape of the vessel needs to be considered when installing the probe. If the probe is not installed correctly, a certain shape of the vessel will produce secondary echoes. This type of problem is mainly concentrated in the conical shape as well as the top of the spherical tank. This particular shape can refocus and amplify the emitted echoes to produce false readings. Choosing the correct mounting position can solve this problem. Please see Figure 2.

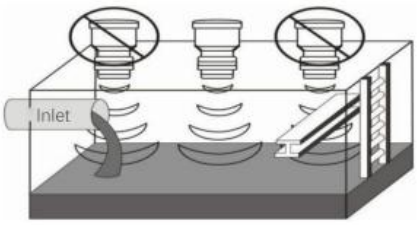

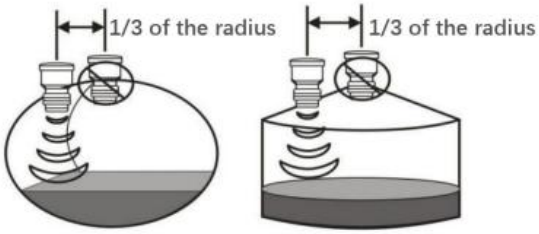

Figure 1 Figure 2

7.1.3 The probe can be mounted either by flange or by standard M60 x 2 thread (the mounting interface is subject to the actual product). Whether flanged or threaded, or with or without the optional tapered barrel, it should be ensured that the bottom of the probe protrudes from the bottom of the process interface. Figure 3 illustrates the proper mounting method.

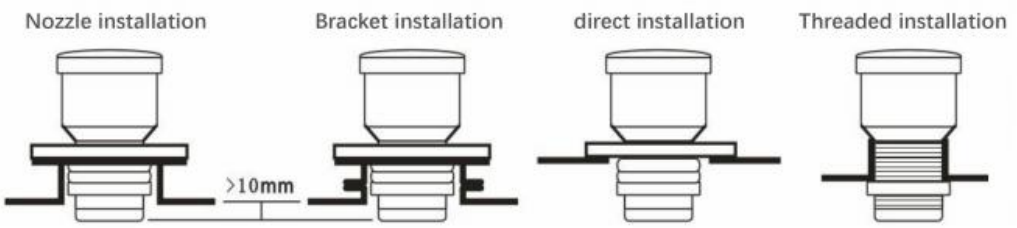

Figure 3

7.1.4 The probe should be installed to avoid its emission of acoustic channels and the vessel wall to maintain the ideal area as shown in Figure IV. Figure IV shows the range and probe installation distance from the vessel wall area, if the installation distance is less than the ideal area under the line specified distance, the probe should be installed in the "minimum spacing" area. If the mounting distance from the side wall is still below the "minimum spacing" line, the transmitter will likely not measure the level correctly. See Figure 4.

TEL: +86-17719566736 WEBSITE: www.kcsensor.com EMAIL: support@kacise.com
ADD: 2nd Building, Tianyuan International Mansion, High-tech Zone, Xi'an City, Shaanxi Province, China

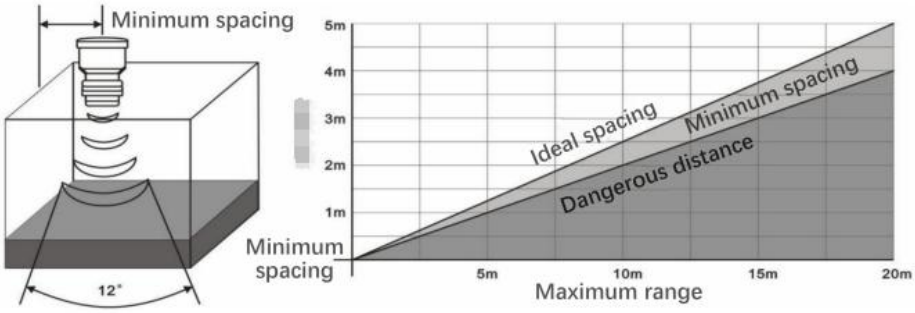

Figure 4

7.1.5 In solids measurement the probe needs to be typically mounted 1/3 of the way from the side wall to the center inlet. This will form a cone when the material accumulates. The probe mounting position shown in Figures 5 and 6 will give an average level reading, which is the height of the level when the material is stacked flat. This is true for conical piles or concave pile surfaces that occur during discharge. The average level measured in this installation is only correct for cylindrical vessels with the inlet at the centerline of the vessel. For other shapes of vessels or where the inlet is not in the middle, the probe should be installed according to the user's requirements and should comply with the aforementioned requirements.

7.1.6 The ultrasonic measurement will get the best results when the surface of the liquid is calm and wave-free. If the surface of the liquid has debris, bubbles or large fluctuations, a wave guide tube should be installed. The diameter of the wave guide tube should be greater than 120mm, and there is no joint. As Figure 7.

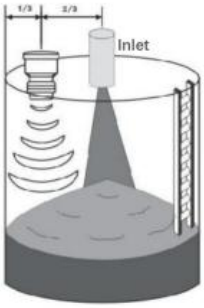

Figure 5

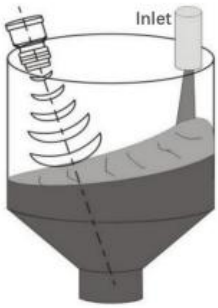

Figure 6

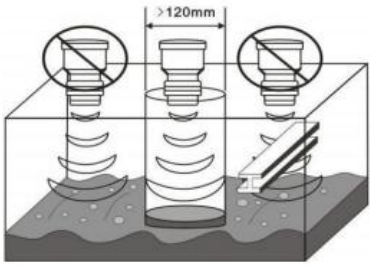

Figure 7

7.2Working mode

This product has a level mode (measuring empty height) and a liquid level mode (measuring difference), and the level mode is used directly without any setting. The difference between liquid level mode and level mode is as follows:

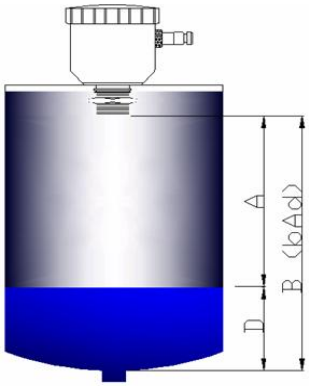

TEL: +86-17719566736 WEBSITE: www.kcsensor.com EMAIL: support@kacise.com
ADD: 2nd Building, Tianyuan International Mansion, High-tech Zone, Xi'an City, Shaanxi Province, China

7.2.1 In liquid level mode

The installation position (B) is the total height from the bottom of the tank to the probe end of the level meter, A is the distance from the probe end to the liquid level, and D is the height of the liquid level, i.e. D= B (installation position) - A. When using this function the level meter displays the value of the liquid level (D).

7.2.2 In solid level mode

Installation position (B) = 0, the level meter display value when using this function is the distance from the end of the level meter probe to the liquid level (A).

7.3 Power supply

It is recommended to use a DC20V DC regulated power supply larger than 2W to supply power, if a switching power supply is used to supply DC, the negative pole of the DC power supply must be connected to earth. For installation and wiring, please refer to the instruction manual or the label on the body of the level meter and the number marked on the inside of the cover. In order to ensure the stability of the machine and the accuracy of the analog output, please warm up the machine for 15 minutes before normal use. Tighten the rear cover to prevent water or dust from entering. When working in the field, please build an awning over the level meter to avoid direct sunlight and rain, and take lightning protection measures.

8. Relay Settings

There are two relay outputs in this machine, when using it, you need to set the switch control logic point, namely D value and H value. D value is the switch start point, H value is the switch stop point. The operating mode is shown in the following diagram (assuming the display value is X).

When the set D value is smaller than the H value：

X < D value, relay work	D-value point	D value < X < H value, keep relay output	H-value point	X>H value, relay stop

When the set D value is bigger than the H value：

X < D value, relay work	D-value point	D value > X > H value, keep relay output	H-value point	X<H value, relay stop

9. Modbus Settings

9.1 RTU communication method

Adopts MODBUS RTU protocol and half-duplex master-slave response mode for communication, when the host sends a request data frame, the slave will reply a data frame.

Default communication address 1, baud rate 9600, parity bit N, data bit 8, stop bit 1.

9.2 Function code 03H, read registers

Host Request							
Byte 1	Byte 2	Byte 3	Byte 4	Byte 5	Byte 6	Byte 7	Byte 8
ADR	03H	Start Register Address High Byte	Start Register Address Low Byte	Read the number of registers High Byte	Read the number of registers Low Byte	CRC Low Byte	CRC High Byte

TEL: +86-17719566736 WEBSITE: www.kcsensor.com EMAIL: support@kacise.com
ADD: 2nd Building, Tianyuan International Mansion, High-tech Zone, Xi'an City, Shaanxi Province, China

Salve Reply								
Byte 1	Byte 2	Byte 3	Byte 4/5	Byte 6/7		Byte M-1/M	Byte M+1	Byte M+2
ADR	03H	Register data Byte amount (N)	Register data 1	Register data 2	.....	Register data M	CRC Low Byte	CRC High Byte

When received error, the slave sends back:

Byte 1	Byte 2	Byte 3	Byte 4	Byte 5
ADR	90H	Error code	CRC low byte	CRC high byte

9.3 RTU communication method

Function code 10H , write multiple registers

Host sends:

Byte 1	Byte 2	Byte 3	Byte 4	Byte 5	Byte 6	Byte 7	Byte 8/9	Byte 10/11	Byte N/N+1	Byte N+2	Byte N+3
ADR	10H	Start Register Address High Byte	Start Register Address Low Byte	Read the number of registers High Byte	Read the number of registers Low Byte	Data byte amount	Register data 1	Register data 2	Register data M	CRC Low Byte	CRC High Byte

9.4 Example Explanation

Read the liquid level value

Read the display value	01 03 00 00 00 02 C4 0B

Modified parameters:

Set the installation height to 3 m	01 10 00 0A 00 02 04 40 40 00 00 67 C4
Set the output starting point to 0	01 10 00 10 00 02 04 00 00 00 00 F2 A3
Set the output ending point to 5	01 10 00 12 00 02 04 40 A0 00 00 66 98

TEL: +86-17719566736 WEBSITE: www.kcsensor.com EMAIL: support@kacise.com
ADD: 2nd Building, Tianyuan International Mansion, High-tech Zone, Xi'an City, Shaanxi Province, China

ModBus RTU Register Address Table

Register Address	Data Type	Parameter Name	Explanation	Configuration Address
0000,0001	Floating point type	Measured value		40001
0004,0005	Floating point type	Supply voltage		40005
0010,0011	Floating point type	Mounting height		40011
0014,0015	Floating point type	Environment setting	1-open/2-close	40015
0016,0017	Floating point type	Output starting point	0.000	40017
0018,0019	Floating point type	Output end point	10.000	40019
0020,0021	Floating point type	Device address		40021
0022,0023	Floating point type	Baud rate		40023
0024,0025	Floating point type	CRC mode	0-N81/1-081/ 2-E81	40025
0028,0029	Floating point type	Channel 1 open		40029
0030,0031	Floating point type	Channel 1 off		40031
0032,0033	Floating point type	Channel 2 open		40033
0034,0035	Floating point type	Channel 2 off		40035
0044,0045	Floating point type	Display unit	1-m	40045
0046,0047	Floating point type	Reserved decimal place	3-0.000	40047
0048,0049	Floating point type	Displays the conversion	1	40049
0050,0051	Floating point type	contrast ratio	40	40051
0052,0053	Floating point type	Backlight delay	0	40053
0070,0071	Floating point type	Filtering	3-normal	40071
0084,0085	Floating point type	Password		40085
0094,0095	Floating point type	Language	1-chinese/ 2-English	40095

TEL: +86-17719566736 WEBSITE: www.kcsensor.com EMAIL: support@kacise.com
ADD: 2nd Building, Tianyuan International Mansion, High-tech Zone, Xi'an City, Shaanxi Province, China